Chain Operated Dim-Out Blind System

Silent Gliss® 4740 Large

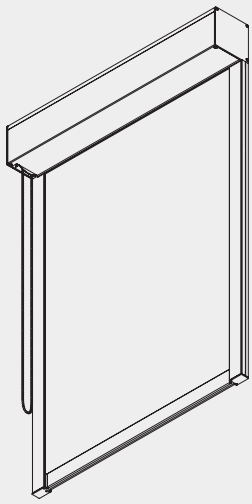

4740

Product Information

- Technically advanced chain-operated dim-out blind system.
- Up to 3m wide, 3m high or 9m² with a maximum weight of 6kg.
- Easy click-in side profiles.
- Inside or outside recess fitting.
- Supplied powder coated black or white.
- Fabrics are 'zipped' into the side profiles.
- Delivered ready-assembled made-to-measure.
- Suitable for inclined positions up to 15° from vertical.
- Spring assisted when required (larger sizes).

www.shadingspecialists.co.uk

Shading Specialists
Unit 23
Orbital 25
Dwight Road
Watford
WD18 9DA
020 8421 6605
info@shadingspecialists.co.uk

Profile and Bending Information

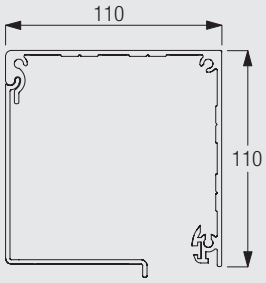

10998-9

Cannot be bent

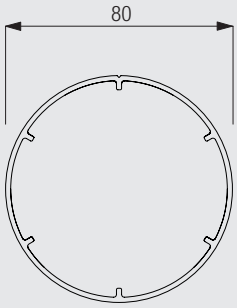

11003

Cannot be bent

How To Measure

Inside fitting

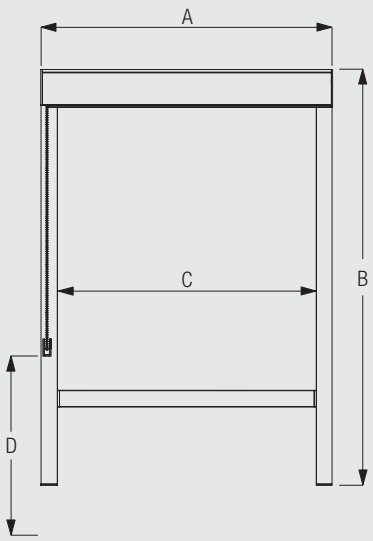

A: System width
B: System drop
C: Fabric width
D: Safety Retainer 10400 min. 150cm above the floor

4740

Face fitting

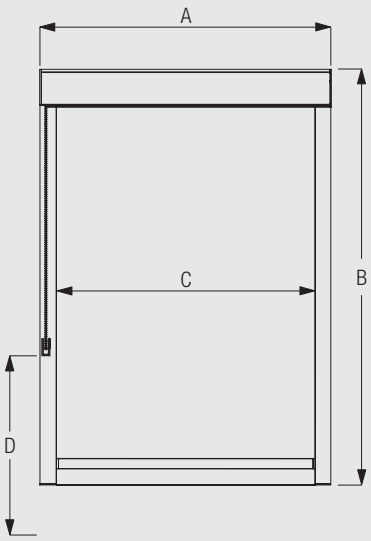

A: System width
B: System drop
C: Fabric width
D: Safety Retainer 10400 min. 150 cm above floor

System Dimensions

max.	min.	max.	m^2 max.	kg max.
3m	65cm	3m	9m²	6kg

Please note: The max. system width/drop also depends on the fabric type.

4740

Fitting Information

Positioning of drill holes

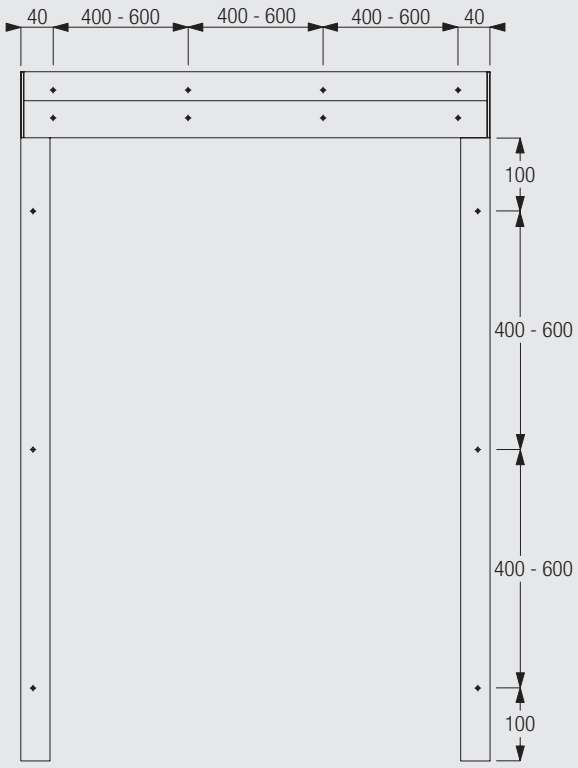

Side profiles 11001 and 11002

4740

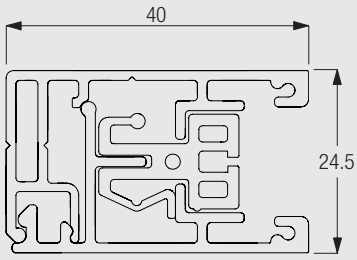

Drawing includes zip profile.

Fitting Options

Ceiling fitting with direct mounting

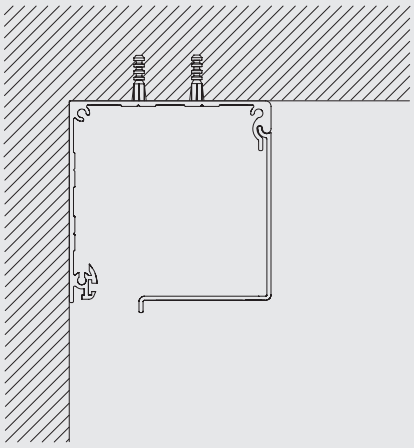

Wall fitting with direct mounting

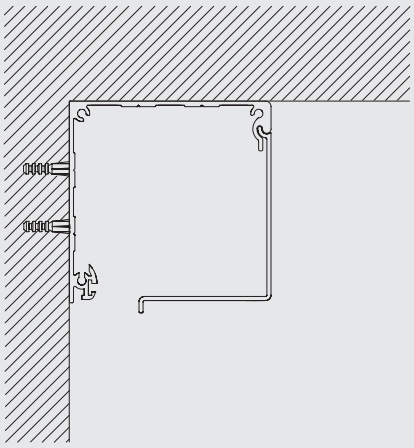

Recess fitting with direct mounting

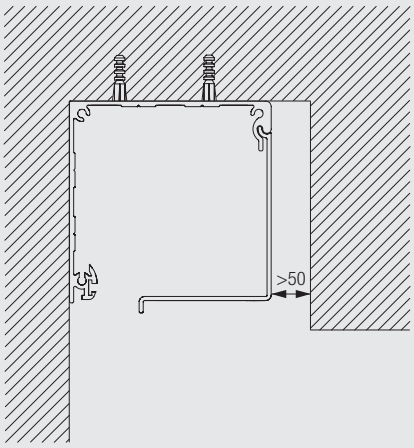

4740

Standard Accessories

10400	Safety Cord Retainer	
10668	Strip (10mm)	

10961	Zip profile		10993	Bottom weight	
11001	Side guide case	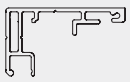	11002	Side guide cover	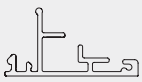
11003	Profile tube, 80 mm		11008	Side cover left for box, 110 mm	
11009	Side cover right for box, 110 mm		11011	Clip for support	
11012	Clip for chain drive		11020	Tube adapter support 80 mm	
11021	Tube adapter chain drive 80 mm		11024	Zip guide	
11025	Zip		11026	Cover left for side guide	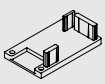
11027	Cover right for side guide	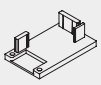	11028	Bottom weight guide left	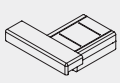
11029	Bottom weight guide right		11030	Bottom weight cover	
11033	Chain drive (L)		11040	Stainless steel bead chain (ø 4.5 mm)	
11040	Stainless steel bead chain (ø 4.5 mm)		11052	Spring set left wound 80 mm	
11053	Spring set right wound 80 mm		10998-9	Box case and cover, 110 mm	

Useful Measures

10993	Bottom weight	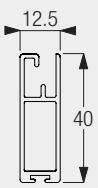	11008	Side cover left for box, 110 mm	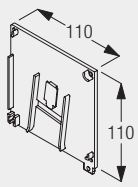

4740

4740

4740